BLOWER PACKAGES

VACUUM BLOWER

The workhorse of the pneumatic conveying industry today, the Positive Displacement Blower Package offers a cost effective reliable means of generating consistent airflows from 60 to 8,000 ICFM with vacuum levels up to 17 inches Hg. Magnum System's design provides a package with easy maintenance access and reduced noise generation to meet even the most strident customer's needs.

Features

- Premium grade discharge silencer
- Inline air filter. Pleated polyester element with pre filter and vacuum rated canister
- Spring loaded vacuum relief valve for mechanical safety relief
- Vacuum breaker valve for efficient operation of system
- Tubular carbon steel base construction, painted
- V-Belt drive package with cover
- Built around positive displacement blowers
- Combination vacuum gauge and NEMA 4 vacuum switch
- Includes a TEFC motor on an easily adjustable base

Optional Features

- Temperature gauges and sensors
- Vacuum transmitters to send a continuous 4- 20mA indication of the current vacuum level to a remote location
- Sound enclosures to dampen noise to even lower levels if needed
- Variable speed drive packages for easy adjustment of airflows

Engineering, Design & Manufacturing
to Keep the Line Moving

BLOWER PACKAGES

SIDE VIEW

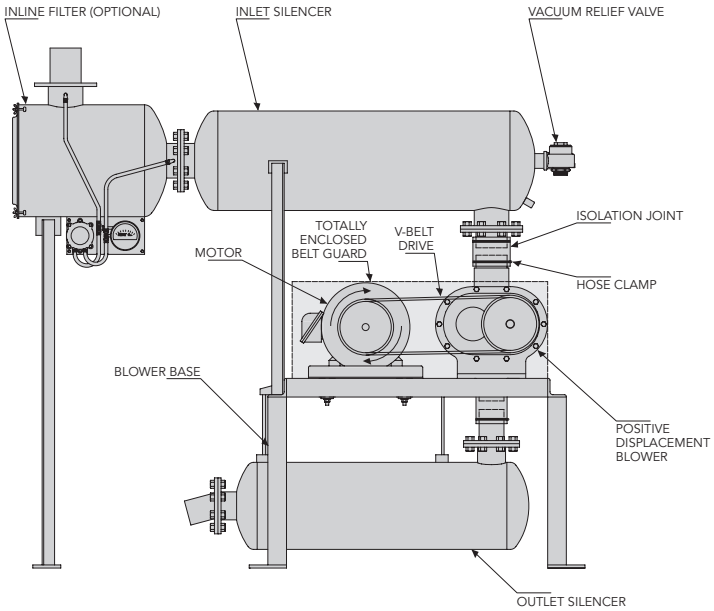

TOP VIEW

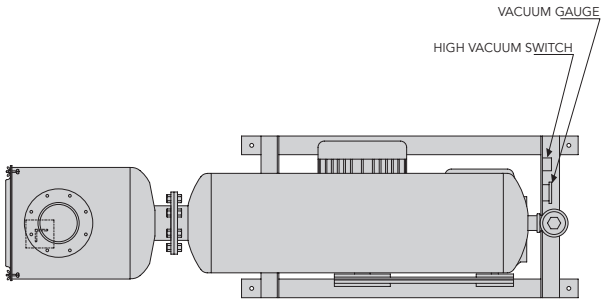

Diagram dimensions are for reference only*

SPECIFICATIONS

Airflow	60-8,000 ICFM
Max Pressure	Up to 17" Hg.
Construction	Carbon Steel Bead Blasted & Painted
Electrical Requirements	230/460 V, 3 phase, 60 hertz *Other voltages are available

BLOWER LOCATION IN A VACUUM TRANSFER SYSTEM

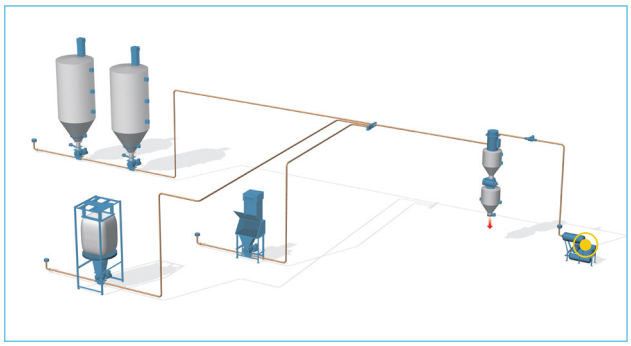

©2017 Magnum Systems, Inc. All rights reserved. Catalog number MS.4018.1117

MAGNUM SYSTEMS

www.magnumsystems.com
Toll Free 800.748.7000 Fax 913.362.7863
1250 Seminary Street, Kansas City, KS 66103